ENTREMATIC

Ditec SPRINT

Automation for swing doors

(translation of the original instructions)

IP2185EN

Technical Manual

www.ditecentrematic.com

Contents

	Subject	Page
1.	**General safety precautions**	34
2.	**Declaration of incorporation of partly completed machinery**	35
2.1	Machinery Directive	35
3.	**Technical specifications**	36
3.1	Operating instructions	37
3.2	Dimensions	37
4.	**Standard installation**	38
5.	**Main components**	39
6.	**Mechanical installation**	40
6.1	Removing the casing	40
7.	**Installation with SBS sliding arm**	41
8.	**Installation with SBA articulated arm**	42
9.	**Installation with SPRINTBRAS 3-lever articulated arm**	43
10.	**Installing the end stop on the ground**	44
11.	**Electrical connections**	45
11.1	Electrical connections for 230V - 120V power supply	45
11.2	Electrical connections for 24V power supply	46
12.	**Connecting the power supply**	47
13.	**Commands**	47
13.1	Testable safety devices	47
14.	**Outputs and accessories**	48
14.1	Function selector button	49
15.	**Electromagnetic emissions**	49
16.	**Adjustments**	50
16.1	Enabling procedure	50
16.2	Dip-switches	50
16.3	Trimmer	51
16.4	Signals	51
17.	**Door requisites for transit of disabled people**	52
18.	**Start-up**	53
19.	**Troubleshooting**	54
20.	**Routine maintenance plan**	55
21.	**Example of installation with function selector**	56

Key

This symbol indicates instructions or notes regarding safety, to which special attention must be paid.

This symbol indicates useful information for the correct functioning of the product.

Factory settings

1. General safety precautions

Failure to respect the information given in this manual
may cause personal injury or damage to the device.
Keep these instructions for future reference

This installation manual is intended for qualified personnel only.
Installation, electrical connections and adjustments must be performed in accordance with Good Working Methods and in compliance with the present standards.
Read the instructions carefully before installing the product.
Incorrect installation could be dangerous.
The packaging materials (plastic, polystyrene, etc.) should not be discarded in the environment or left within reach of children, as they are a potential source of danger.
Before installing the product, make sure it is in perfect condition.
Do not install the product in explosive areas and atmospheres: the presence of inflammable gas or fumes represents a serious safety hazard.
Before installing the motorisation device, make all the necessary structural modifications to create safety clearance and to guard or isolate all the crushing, shearing, trapping and general hazardous areas.
Make sure the existing structure is up to standard in terms of strength and stability. The motorisation device manufacturer is not responsible for failure to observe Good Working Methods when building the frames to be motorised, or for any deformations during use.
The safety devices (photocells, safety edges, emergency stops, etc.) must be installed taking into account the applicable laws and directives, Good Working Methods, installation premises, system operating logic and the forces developed by the motorised door.
The safety devices must protect the crushing, shearing, trapping and general hazardous areas of the motorised door.
Display the signs required by law to identify hazardous areas.
Each installation must bear a visible indication of the data identifying the motorised door.
When requested, connect the motorised door to an effective earthing system that complies with current safety standards.
During installation, maintenance and repair operations, cut off the power supply before opening the cover to access the electrical parts.
The automation protection casing must be removed by qualified personnel only.
The electronic parts must be handled using earthed antistatic conductive arms. The manufacturer of the motorisation device declines all responsibility if component parts not compatible with safe and correct operation are fitted.
Only use original spare parts when repairing or replacing products.
The installer must supply all information on the automatic, manual and emergency operation of the motorised door, and must provide the user with the operating instructions.

2. Declaration of incorporation of partly completed machinery

(Directive 2006/42/EC, Annex II-B)

The manufacturer Entrematic Group AB, with headquarters in Lodjursgatan 10, SE-261 44 Landskrona, Sweden, declares that the automation for Ditec SPRINT type swing doors:

- has been constructed to be installed on a manual door to construct a machine pursuant to the Directive 2006/42/EC. The manufacturer of the motorised door shall declare conformity pursuant to the Directive 2006/42/EC (Annex II-A), prior to the machine being put into service;
- conforms to the applicable essential safety requirements indicated in Annex I, Chapter 1 of the Directive 2006/42/EC;
- conforms to the Low Voltage Directive 2006/95/EC;
- conforms to the Electromagnetic Compatibility Directive 2004/108/EC;
- the technical documentation conforms to Annex VII-B of the Directive 2006/42/EC;
- the technical documentation is managed by Marco Pietro Zini with headquarters in Via Mons. Banfi, 3 - 21042 Caronno Pertusella (VA) - ITALY;
- a copy of technical documentation will be provided to national competent authorities, following a suitably justified request.

Landskrona, 15-01-2013

Marco Pietro Zini
(Chairman)

2.1 Machinery Directive

Pursuant to the Machinery Directive (2006/42/EC), the installer who motorises a door or gate has the same obligations as the manufacturer of machinery and as such must:

- prepare the technical data sheet which must contain the documents indicated in Annex V of the Machinery Directive;
  (The technical data sheet must be kept and placed at the disposal of competent national authorities for at least ten years from the date of manufacture of the motorised door);
- draw up the EC Declaration of Conformity in accordance with Annex II-A of the Machinery Directive and deliver it to the customer;
- affix the EC marking on the motorised door in accordance with point 1.7.3 of Annex I of the Machinery Directive.

3. Technical specifications

	SPRINT PN - P - V	SPRINT LN - L - LV	SPRINT PNJ - VJ
Power	230V~ 50/60 Hz	24V⎓ (to be protected with an external fuse)	120V~ 60 Hz
Power	0.5 A	3 A	1 A
Power	120W	120W	120W
Torque	25 Nm	25 Nm	25 Nm
Insulation class	Class 2 ⧈	/	Class 2 ⧈
Opening time	min 3s /90° max 6s /90°	min 3s /90° max 6s /90°	min 3s /90° max 6s /90°
Closing time	min 4s /90° max 7s /90°	min 4s /90° max 7s /90°	min 4s /90° max 7s /90°
Service class	5 - VERY INTENSE	5 - VERY INTENSE	5 - VERY INTENSE
Intermittence	S3 = 80%	S3 = 80%	S3 = 80%
Type of operation	Motor opening Motor closing	Motor opening Motor closing	Motor opening Motor closing
Max load (door wing 90cm)	110kg	110kg	110kg
Max load (door wing 1.2m)	70kg	70kg	70kg
Temperature	min -20°C max +55°C	min -20°C max +55°C	min -20°C max +55°C
Temperature with batteries	min -10°C max +50°C	min -10°C max +50°C	min -10°C max +50°C
Degree of protection	IP30	IP30	IP30
Control panel	EL38	EL38	EL38
Power supply	AL05	/	AL05J
F1 fuse	F1A	/	F2A
Motor output	24V⎓ 3.5 A	24V⎓ 3.5 A	24V⎓ 3.5 A
Power supply for accessories	24V⎓ 0.3 A	24V⎓ 0.3 A	24V⎓ 0.3 A

Operating instructions

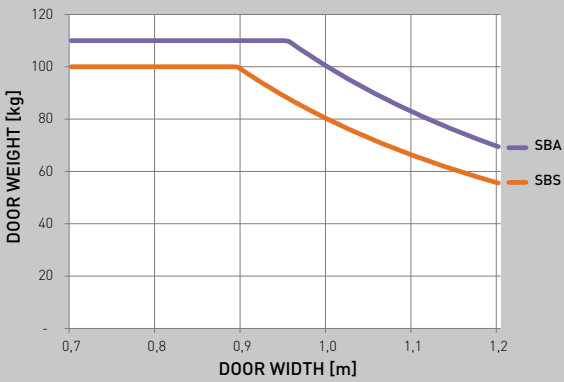

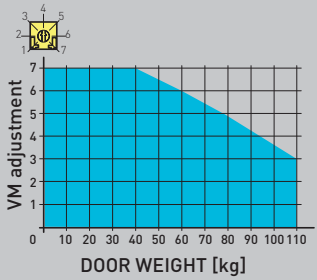

IP2185EN - 2015-11-25

3.1 Operating instructions

Service class: 5 (minimum 5-year working life with 600 cycles per day).
Applications: VERY INTENSE (for entrances with very intense pedestrian use).

- The performance characteristics refer to the recommended weight (approx. 2/3 of the maximum permitted weight). When used with the maximum permitted weight, a reduction in the above mentioned performance levels can be expected.
- The service class, running times and number of consecutive cycles are merely indicative, having been statistically determined under average operating conditions and therefore not necessarily applicable to specific conditions of use.
- Each automatic entrance has variable elements such as friction, balancing and environmental factors, all of which may substantially alter the performance characteristics or working life of the entrance itself or its components (including the automatic devices). The installer should apply suitable safety conditions for each particular installation.

3.2 Dimensions

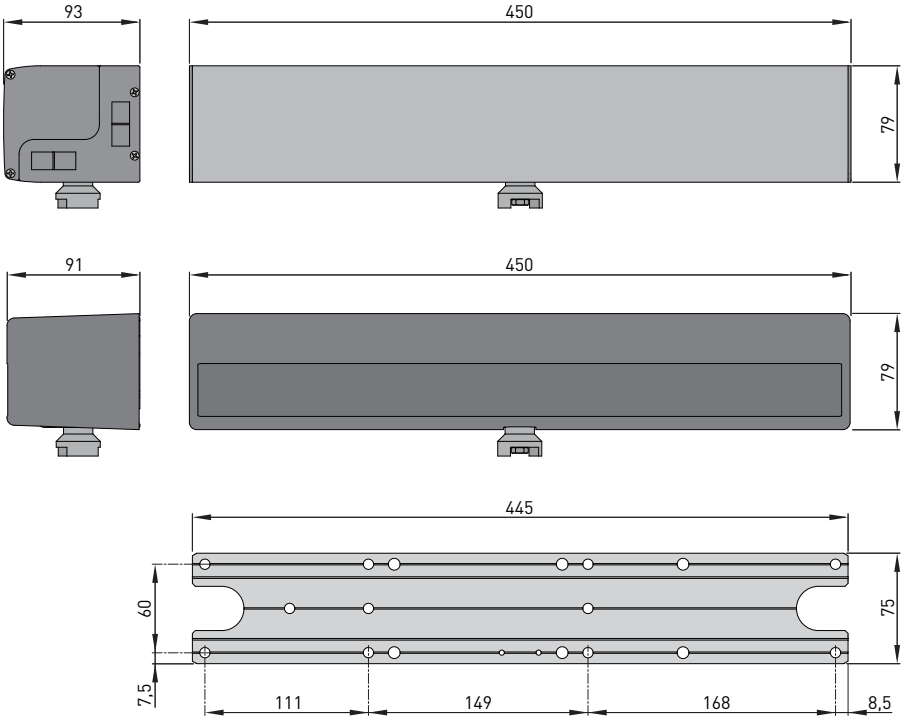

NB: unless otherwise specified, all measurements are expressed in millimetres (mm).

4. Standard installation

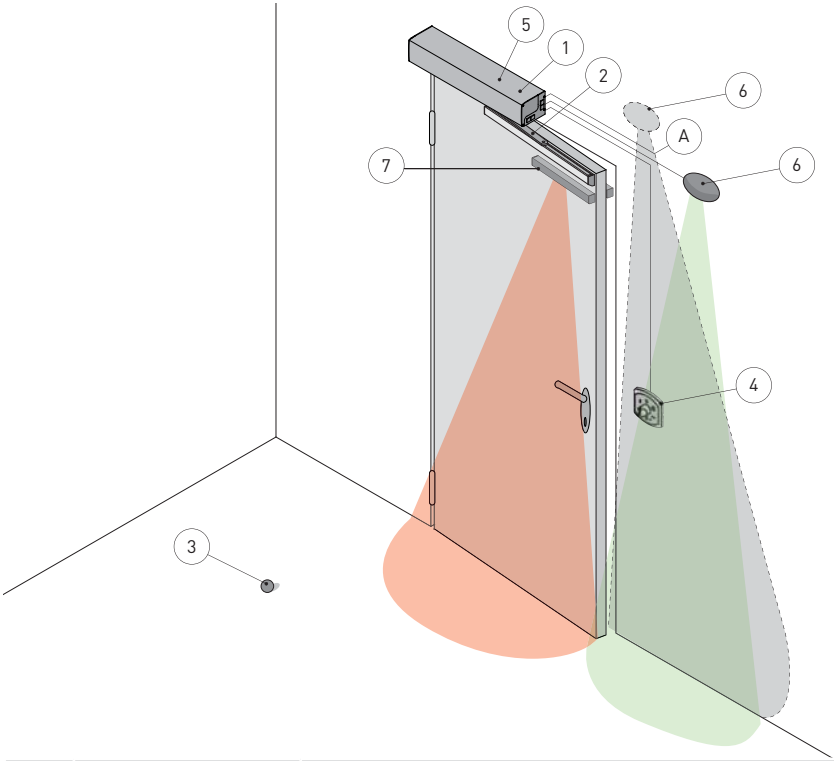

Ref.	Code	Description
1	SPRINT	Automation
2	SBA SBS SPRINTBRAS FBA	Articulated movement arm Sliding movement arm Articulated movement arm with three levers End stop for articulated arm
3		End stop on the ground
4	COMH-COMK	Function selector switch
5	SPRINTBAT	Battery kit
6	PASM24W (microwave), or PASM243 (microwave), or PASS24 (microwave), or PASS24W (microwave), or PASA (infrared)	Opening sensor PAY ATTENTION TO THE FASTENING POSITION.
7	REM35 REM90 REM100	Sensor for safe opening and closing
A		Connect the power supply to a type-approved omnipolar switch, with a contact opening distance of at least 3mm (not supplied). Connection to the mains must be via an independent channel, separate from the connections to the control and safety devices.

NB: the given operating and performance features can only be guaranteed with the use of DITEC Entrematic accessories and safety devices.

5. Main components

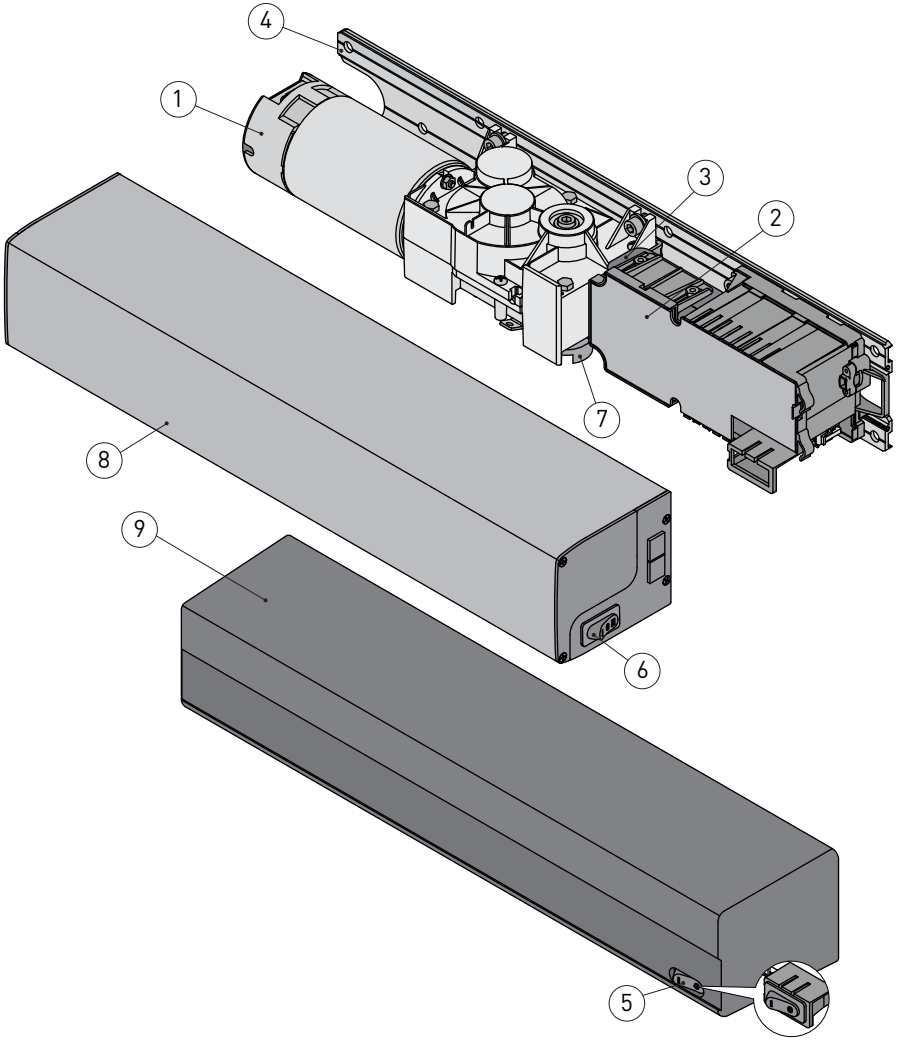

Ref.	Code	Description
1		24V⎓ motor with encoder
2	EL38	Control panel
3	SPRINTBAT	Battery kit
4		Base plate
5		ON/OFF button
6		Function selector button
7		Arm support
8		Aluminium casing [SPRINT V-SPRINT LV-SPRINT VJ]
9		Grey plastic casing [SPRINT P-SPRINT L] Black plastic casing [SPRINTPN-SPRINT LN-SPRINT PNJ]

6. Mechanical installation

Check the stability and weight of the door wing. Make sure it moves smoothly, without any friction (reinforce the frame if necessary).
Any "door closer" mechanisms must be removed or completely annulled.

WARNING: in the event of installation on doors that divide areas with different pressure levels, check for proper functioning.

6.1 Removing the casing

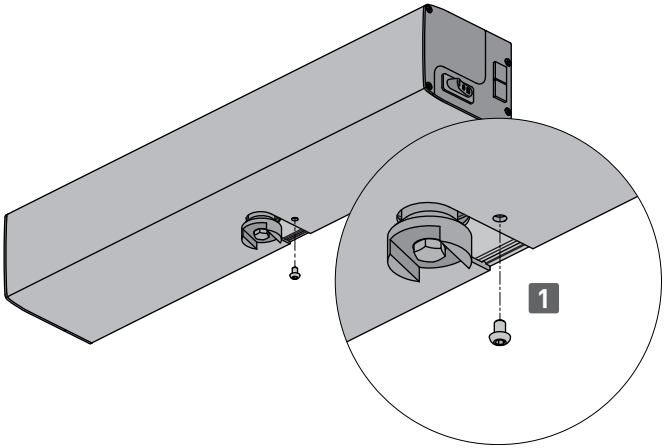

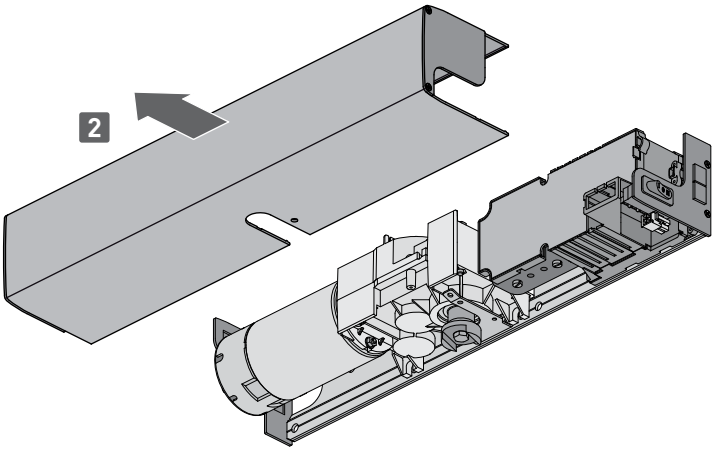

7. Installation with SBS sliding arm

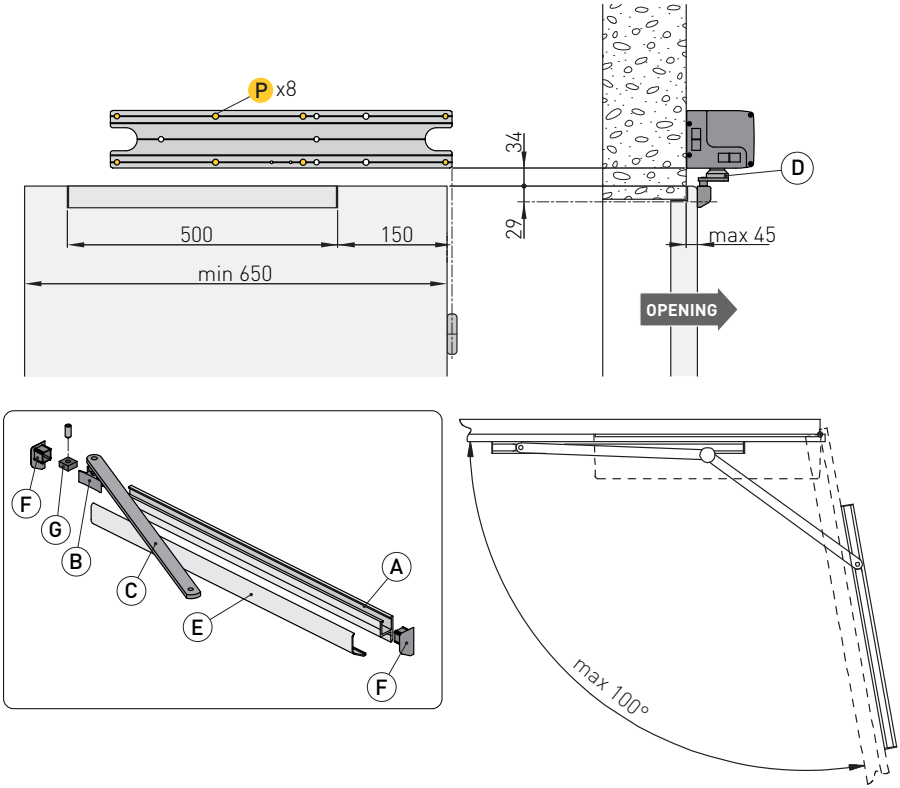

Use the SBS sliding arm for doors that open inwards (as seen from the automation side).

- Remove the casing and fix the automation to the wall in the points indicated (P). Make sure it is stable and level, respecting the measurements given in the figure (refer to the hinge axis).
- Drill the guide [A] and fix it to the door.
- Insert the sliding block [B] of the sliding arm in the guide [A]. Fix the arm [C] to the automation, making sure it is inserted in the arm support seat [D].
- Position the cover [E] and the two heads [F].
- Adjust the internal end stop [G] in the best position.

8. Installation with SBA articulated arm

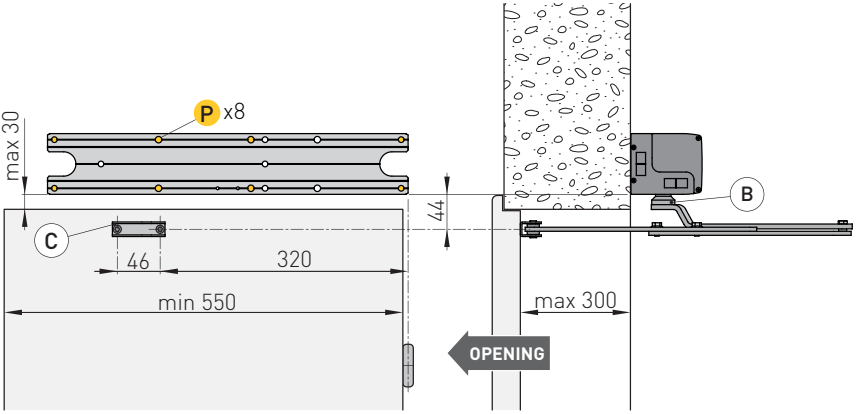

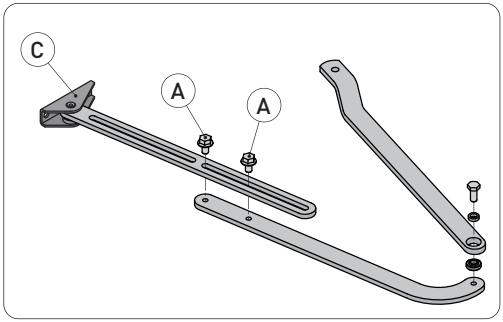

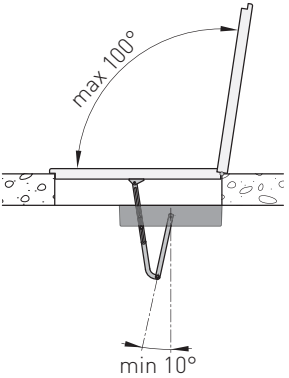

Use the SBA articulated arm for doors that open outwards (as seen from the automation side).

- Remove the casing and fix the automation to the wall in the points indicated (P). Make sure it is stable and level, respecting the measurements given in the figure (refer to the hinge axis).
- Assemble the articulated arm - without tightening the stroke screws [A] - and fix it to the automation, making sure it is inserted in the arm support seat [B].
- Fix the bracket [C] to the door.
- With the door closed, adjust the arm and then tighten the stroke screws [A].

9. Installation with SPRINTBRAS 3-lever articulated arm

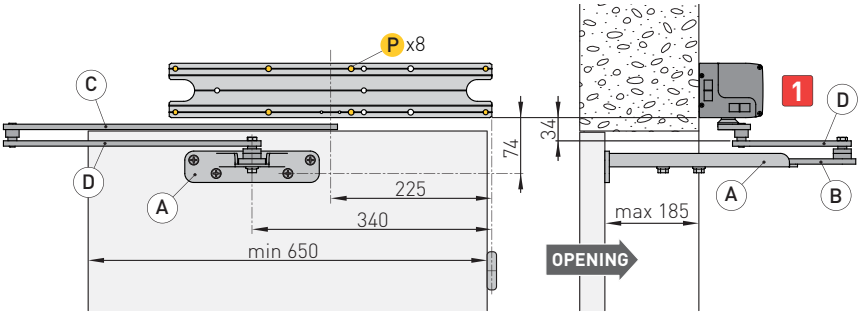

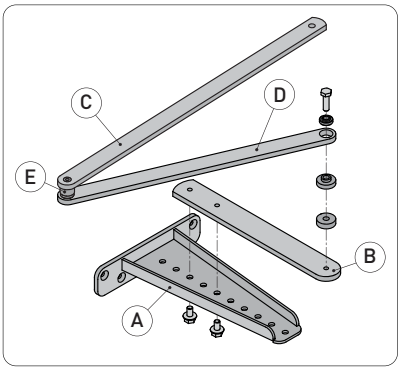

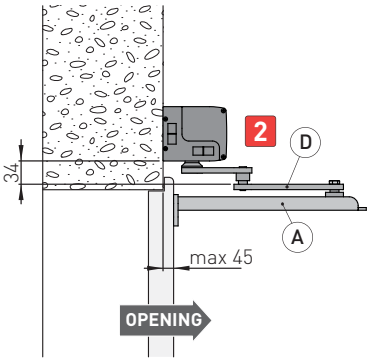

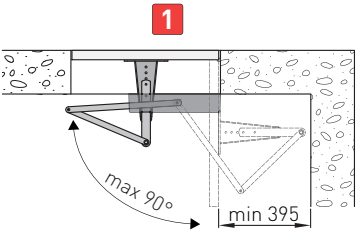

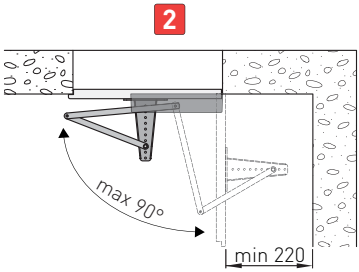

Use the SPRINTBRAS articulated arm for doors that open inwards (as seen from the automation side).

- Remove the casing and fix the automation to the wall in the points indicated (P). Make sure it is stable and level, respecting the measurements given in the figure (refer to the hinge axis).

WARNING: the distance between the automatic system fixing point and the door can be between 185mm and 45mm.

- Adjust the length of the bracket [A] and the arm [B] so as to form an angle of 80-90° in relation to the arm [C] when the door is closed.
  NB: the SPRINTBRAS articulated arm is assembled for doors with left-hand opening. In the case of doors with right-hand opening, separate arm [D] from arm [C] by removing the pin [E], then reassemble the two arms, rotating them by 180°.
- For distances of 45-20mm, remove arm [B] and fix arm [D] directly on the bracket [A] using the spacer and screw supplied, so as to form an angle of 80-90° in relation to the arm [C].

10. Installing the end stop on the ground

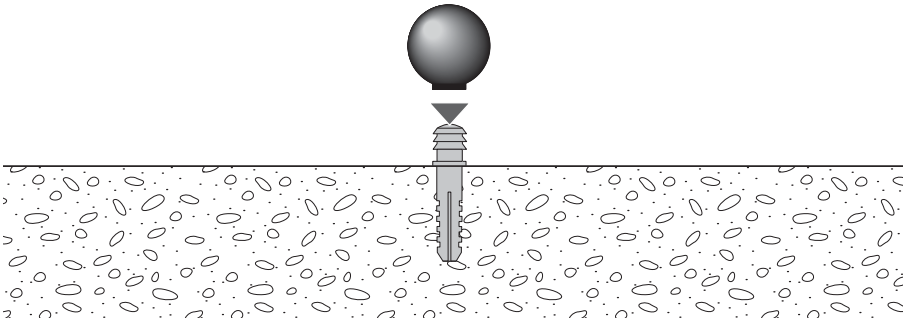

Fix the end stop to the ground so it acts as a mechanical opening stop.

11. Electrical connections

11.1 Electrical connections for 230V~ / 120V~ power supply

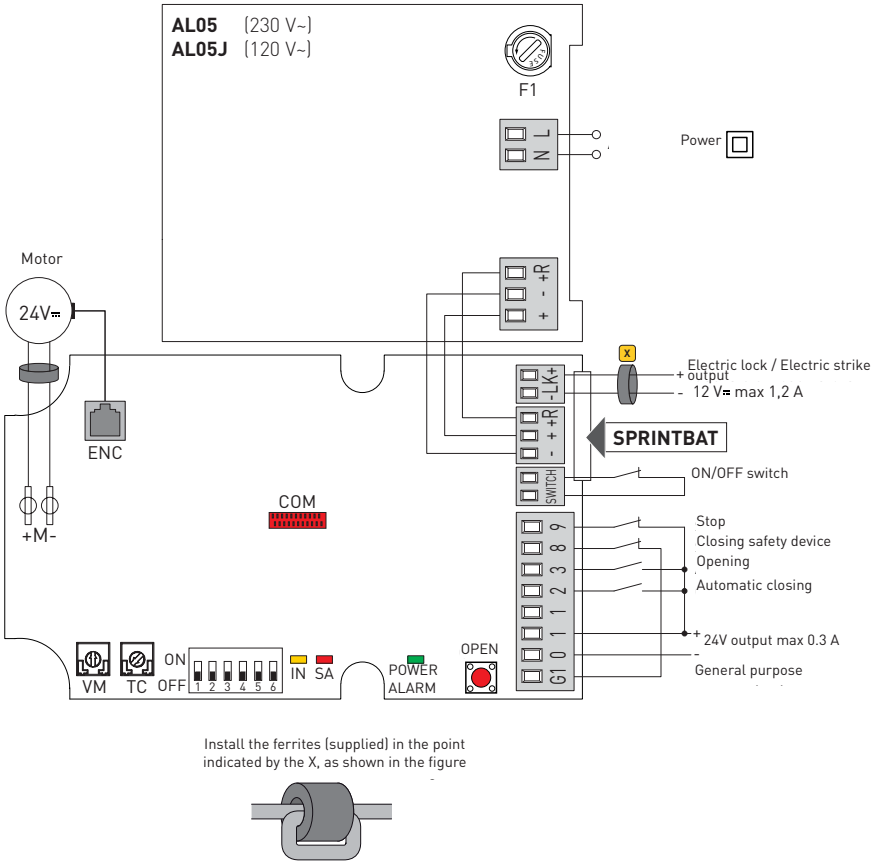

The figure shows the main connections on the control panel EL38.

11.2 Electrical connections for 24V power supply ⎓ (to be protected with an external F5A fuse, not supplied)

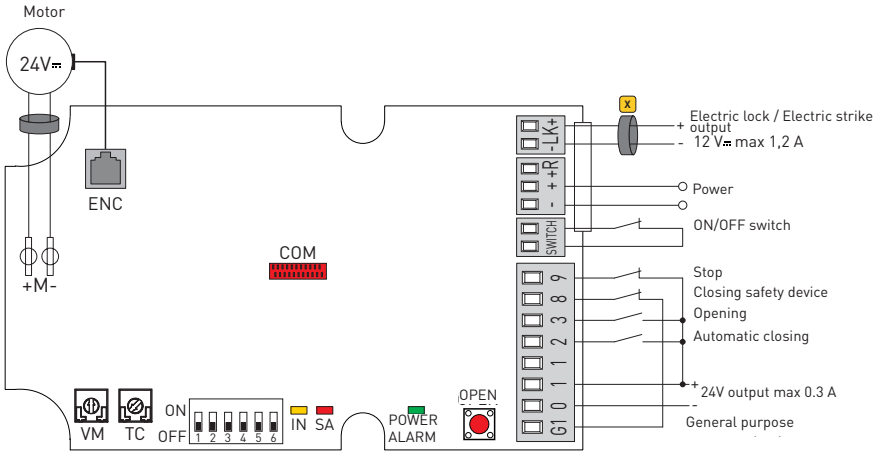

Where there is an X, install the ferrites supplied (as shown in the figure)

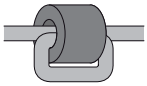

12. Connecting the power supply

Before connecting the power supply, make sure the plate data correspond to those of the mains power supply.
An omnipolar disconnection switch with a contact opening distance of at least 3mm must be fitted on the mains supply.
Check there is an adequate residual current circuit breaker and overcurrent cut-out upstream of the electrical system.
Use a H05RN-F 2G1.5 or H05RR-F 2G1.5 type electric cable, and connect it to terminals L (brown) and N (blue) inside the automation. Secure the cable using a special cable clamp, then remove the sheath only where the clamp is.
Connection to the mains power supply (in the section outside the automation) is made on an independent channel, separated from the connections to the control and safety devices.
Make sure there are no sharp edges that may damage the power supply cable.
Make sure the mains power conductors (230V) and accessory power conductors (24V) are separated.

13. Commands

Command		Function	Description
1 — 2	NO	CLOSURE	The closure of the contact activates the closing operation.
		CLOSURE CLOSURE	The permanent closure of the contact enables automatic closure.
1 — 3	NO	OPENING	The closure of the contact activates the opening operation.
G1 — 8	NC	CLOSING SAFETY	With DIP6=OFF, the opening of the contact reverses the movement (re-opening) during the closing operation.
1 — 9	NC	STOP	The opening of the contact causes any movement to stop, and all normal or emergency functions are excluded.
OPEN	NO	OPENING	Press quickly to activate the opening operation.

WARNING: jumper all NC contacts that are not used. Terminals with the same number are equal.

13.1 Testable safety devices

Command		Function	Description
1 — 8	NC	CLOSING SAFETY	The opening of the contact reverses the movement (re-opening) during the closing operation.
G1		SAFETY TEST	With DIP6=OFF, connect terminal G1 of the control panel to the corresponding test terminal on the safety device. Terminal G1 activates a safety device test on each cycle. If the test fails, the SA LED comes on and the test is repeated.

For other configurations, use the SPRINT SET card.

14. Outputs and accessories

Output	Value - Accessories	Description
0 1 - +	24V⎓ 0.3 A	Power supply to accessories. Output for power supply to external accessories. NB: the maximum absorption of 0.3 A corresponds to the sum of all terminals 1.
-LK+	12V⎓ 1.2 A	Electric lock / Electric strike. Output for electric lock / electric strike power supply. The power supply to the electric lock / electric strike has a lead time of 0.1 s and a duration of 1 s.
G1 0 + -	24V⎓ 30 mA	General purpose output. With DIP6=ON, the output supplies a positive pulse at the start of each opening operation. With DIP6=OFF, a test is activated on the safety sensor when each opening operation is completed. If the test fails, the SA LED comes on and the test is repeated.
SWITCH		ON/OFF switch. Switch for turning on and off. When the device is switched ON, the first operation is performed with the acquisition of the stop positions. When it is switched OFF, the line power supply and batteries (if installed) are disconnected from the control panel. WARNING: jumper the contact if it is not used.
COM	SPRINTSET	This defines the G1 output operating mode using the SPRINTSET customisation module. WARNING: the module must be inserted and removed with the power supply disconnected.
MOT + - ENC		Motor-encoder connection. Connect the motor and encoder to the control panel by means of the cables supplied.
	SPRINTBAT 1 x 12V 1.2 Ah	Anti-panic mode batteries. With the mains power supply off, the automation will carry out an opening operation at low speed. When the door is open, the power supply is disconnected from the control panel. To charge the batteries, connect the mains power and the battery kit at least 30 minutes before starting up the system. WARNING: for charging purposes, the battery kit must be connected to the control panel at all times. Periodically check the efficiency of the battery kit.
		Continuous mode batteries. With the mains power supply off, the battery kit will guarantee continuous operating. To charge the batteries, connect the mains power and the battery kit at least 30 minutes before starting up the system. WARNING: for charging purposes, the battery kit must be connected to the control panel at all times. Periodically check the efficiency of the battery kit.

14.1 Function selector button

SPRINTV

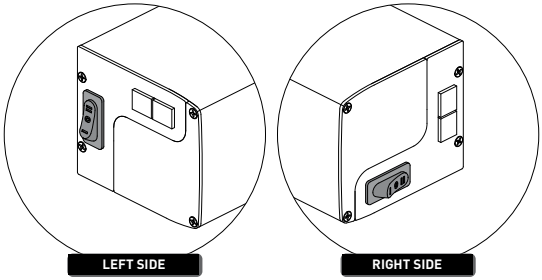

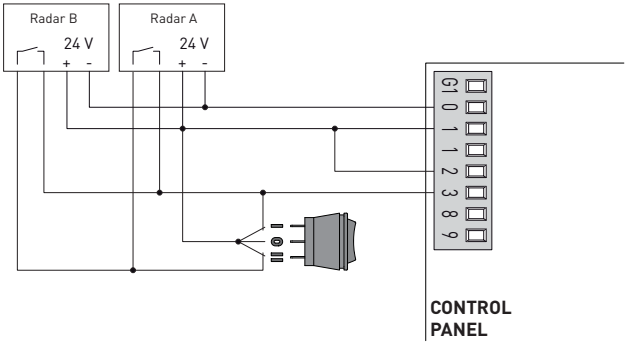

Ref.		Description
I		Door open. Permanent opening command 1-3.
0		Door closed. The radar commands (A-3) are excluded. The door can be opened by command 1-3 (or pushed open if the Push&Go function is enabled). The door close automatically (contact 1-2).
II		Two-way operation.

15. Electromagnetic emissions

WARNING: in accordance with Directive 2004/108/EC, the supplied ferrites must be installed as shown on pages 16-17.

Pass the cable through the ferrite, make 1 turn and protect it from knocks by using heat-shrink sheathing or similar.
The ferrite must be secured to the cable near the terminal boards (approx. 50 mm).

16. Adjustments

16.1 Enabling procedure

The trimmers and DIPs affect the force limiting safety function.
They must be set as instructed. If not, the modifications will not be accepted and the IN LED will flash.

- press the OPEN key for 4 seconds (the IN LED flashes);
- adjust the trimmers and select the DIPs within the 5-minute time limit;
- to complete the procedure, press the OPEN key for 2 seconds or wait for the time limit to expire.

16.2 Dip-switches

	Description	OFF	ON
DIP1	Push & Go function. The manual pushing of the door activates an automatic opening operation.	Disabled.	Enabled. Use the SPRINT SET card to disable the motor closure thrust.
DIP2	Electric lock / Electric strike function.	The impulse is given simultaneously with the motor start-up for opening.	Prior to the opening, a closure thrust is made simultaneously with the electric lock / electric strike activation impulse. At about 20° from the closing stop, the door increases its force/speed to ensure correct closure.
DIP3	LowEnergy function. Refer to the Requisites chapter (page 21) for doors for the transit of disabled people.	Disabled.	Enabled.
DIP4	Selecting opening direction. The opening direction is intended by viewing the automation from the side being examined.	SEE FIGURE	SEE FIGURE
DIP5	Selection of the type of arm.	SBA articulated arm. SEE FIGURE	SBS sliding arm BRAS articulated arm SEE FIGURE
DIP6	Selecting the G1 output mode	Enable the test on the safety sensor.	Positive pulse at the start of each opening operation.

NB: when the door is closed, a closure thrust is maintained by the motor.
Use the additional SPRINT SET card to disable the motor closure thrust.

SBA arm	DIP4	DIP5	SBS - BRAS arm	DIP4	DIP5
	ON	OFF		OFF	ON
	OFF	OFF		ON	ON

16.3 Trimmers

Trimmer	Description
min VM max	Operation speed adjustment. Adjusts the automation operation speed. The closing speed equal to 2/3 the opening speed. WARNING: set the correct operation speed on the basis of the usage indications given in the weight diagram, and make sure the operating force and the force of impact between the door and the obstacle are lower than the values indicated by Standard EN 16005. 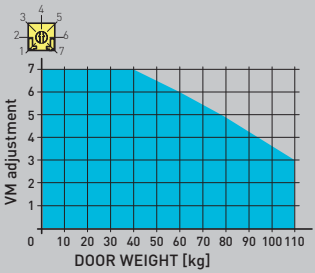
0 s TC 30 s	Setting automatic closing time. Adjust the time that passes between the end of the opening operation and the start of the automatic closing operation.

16.4 Signals

LED	On	Flashing light
IN	Arrival of a command 1-3.	Variation of the status of a dip-switch or the command 1-2.
		Trimmer enabling procedure in progress.
SA	The safety contact is open.	Safety test failure (DIP6=OFF)
POWER ALARM	Power supply on.	Encoder not working or automation faulty.

17. Requisites for doors for Low Energy use

If the Ditec SPRINT automation is used with Low Energy service, adjust the VM trimmer so that the opening and closing times (apart from deceleration) are the same as (or greater than) those indicated in the table.

		Door wing weight [kg]				
		50	60	70	80	90
Door wing length [mm]	750	3,0 s	3,0 s	3,0 s	3,0 s	3,5 s
	850	3,0 s	3,0 s	3,5 s	3,5 s	4,0 s
	1000	3,5 s	3,5 s	4,0 s	4,0 s	4,5 s
	1200	4,0 s	4,5 s	4,5 s	5,0 s	5,5 s

Also make the adjustments indicated in the figure:

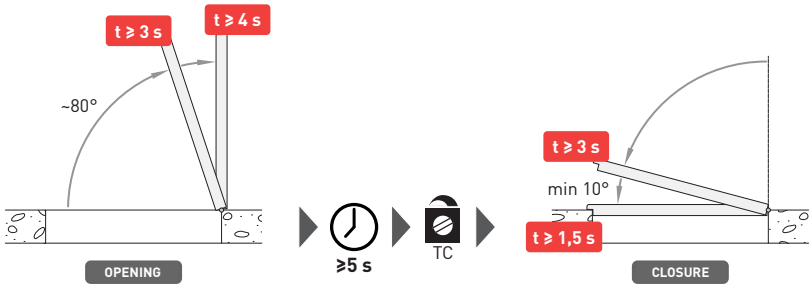

18. Start-up

WARNING: Before performing any type of operation, make sure that the automation is turned off and the batteries are disconnected.
The operations in point 4 are performed without safety devices.
The trimmers can only be adjusted with the automation idle.

WARNING: to make the adjustments, you must perform the enabling procedure as explained on page 21.

1- Select the drive force using DIP3, and select the correct opening direction using DIP4. Set DIP1 and DIP2 on the basis of the type of installation.
2- Set the TC trimmer at the minimum, and the VM trimmer at the halfway point.
3- Jumper the safety devices (1-8) and the stop (1-9).
4- Switch on the power supply (mains and batteries).
WARNING: the control panel performs an automatic POWER RESET with each start, and the first opening or closing operation is performed at low speed to allow automatic self-learning of the stop positions (acquisition).
Make sure the automation is operating correctly with further opening commands, and set the required operating speed using the VM trimmer.
5- Remove the jumpers and connect the safety devices (1-8) and the stop (1-9).
6- Adjust the automatic closure with the TC trimmer (enabled by command 1-2).
7- Use DIP1 to activate the Push&Go opening function if required.
8- Connect any accessories and check they operate correctly.
9- If the automation encounters an obstacle during a closing operation, the movement is reversed.
If the automation encounters an obstacle during an opening operation, movement is stopped.
If the obstacle is detected twice consecutively, it is considered as the new stop until it is removed.

WARNING: -make sure the operating force and the force of impact between the door and the obstacle are lower than the values indicated by Standard EN 16005.

NB: in the event of servicing or if the control panel is to be replaced, repeat the start-up procedure.

19. Troubleshooting

Problem	Possible cause	Operation
The automation does not open or close.	No power supply. (POWER ALARM LED off).	Check the control panel is powered correctly.
	Short-circuited accessories (POWER ALARM LED off).	Disconnect all the accessories from terminals 0-1 (a voltage of 24V⎓ must be present) and then reconnect them one at a time.
	Blown line fuse. (POWER ALARM LED off).	Replace fuse F1.
	The stop contact is open.	Check terminal 9 of the control panel and the position of the function selector switch (if present).
	The automation is locked by bolts and locks.	Check that the door wings move freely.
	Safety contacts are open. (SA LED on).	Check terminal 8 on the control panel.
	The safety devices are activated. (SA LED on).	Make sure the safety devices are clean and are operating correctly.
	The radars are activated.	Make sure the radar is not subjected to vibrations and does not make false readings or check the presence of moving objects within its range.
	The automatic closure does not work.	Check jumper 1-2 and the position of the function selector switch (if present).
	Safety test failure (DIP6=OFF) - (SA LED ON).	Check the position of DIP6 and terminal 8 on the control panel.
The automation opens by itself.	The radars are unstable or detect moving objects.	Make sure the radar is not subjected to vibrations and does not make false readings or check the presence of moving objects within its range.
The automation opens/ closes briefly and then stops.	Encoder disconnected, false encoder contacts, encoder fault. (flashing POWER ALARM LED).	Check the encoder is connected correctly, clean the contacts by connecting and disconnecting the encoder plug on the contacts, or replace the encoder.
	The motor connection wires are inverted. (flashing POWER ALARM LED).	Check the motor connection wires.
	Friction is present	Manually check that the door wings move freely and adjust the door wing in height by lifting it.

20. Routine maintenance plan

Perform the following operations and checks every 6 months, according to the intensity of use of the automation.
Disconnect the 230V~ power supply and batteries (if present), and position the ON-OFF switch on OFF:

- Clean and lubricate the moving parts.
- Check the securing screws are firmly in place.
- Check all the electrical connections.
- Make sure the batteries are in good working order.

Restore the 230V~ power supply and batteries (if present), and position the ON-OFF switch on ON:

- Check the stability of the door, and make sure it moves smoothly.
- Check the condition of the pivots or hinges.
- Make sure all the command and safety devices are working properly.

NB: for spare parts, see the spares price list.

Only use original spare parts when repairing or replacing products.
The installer must supply all information concerning the automatic, manual and emergency operation of the motorised door or gate, and must provide the user with the operating instructions.
The installer must prepare and keep a maintenance record showing all the routine and extraordinary maintenance work carried out.

21. Example of installation with function selector

The door opens with the radar commands PAS (1-3), and guarantees safe opening via the REM device (G1-8).
The door operating mode is set using the COMH-K function selector.

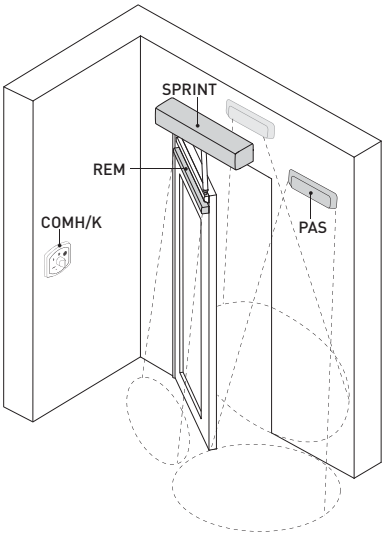

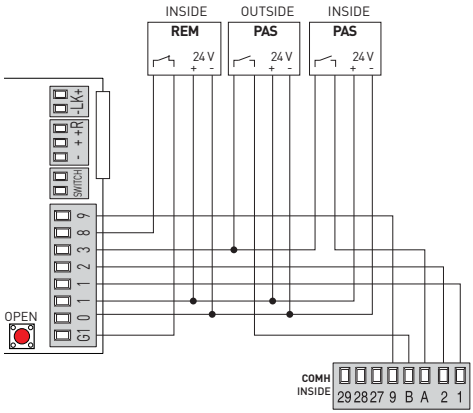

IP2185EN - 2015-11-25

All the rights concerning this material are the exclusive property of Entrematic Group AB.
Although the contents of this publication have been drawn up with the greatest care, Entrematic Group AB cannot be held responsible in any way for any damage caused by mistakes or omissions. We reserve the right to make changes without prior notice.
Copying, scanning or changing in any way is expressly forbidden unless authorised in writing by Entrematic Group AB.

IP2185EN - 2015-11-25

IP2185EN - 2015-11-25

ENTREMATIC

Entrematic Group AB
Lodjursgatan 10
SE-261 44, Landskrona
Sweden
www.ditecentrematic.com